SEMI-FLUSH FIXTURE INSTALLATION INSTRUCTIONS

Please read carefully and save these instructions, as you may need them at a later date.

CAUTION

WARNING: Risk of Fire. Consult a qualified electrician to ensure correct branch circuit conductor. Min 90°C supply conductors.

Turn off the main power at the circuit breaker before installing the fixture, in order to prevent possible shock.

GENERAL

All electrical connections must be in accordance with local and National Electrical Code (N.E.C.) standards. If you are unfamiliar with proper electrical wiring connections obtain the services of a qualified electrician.

Remove the fixture and the mounting package from the box and make sure that no parts are missing by referencing the illustrations on the installation instructions.

ASSEMBLY AND INSTALLATION

1. Thread the Nipple(12) with Hex Nut to Connector(11).
2. Place the Glass(18),Rubber washer(13),Flat washer(14),then screw the Hex nut(15).
3. Attach the Cap(16) to the fixture then secure with the Finial(17)
4. Thread two Screw(20) to the Mounting bar(6) and secure with the Hex nut(8).
5. Secure the Mounting bar(6) with Mounting screw(7) to the Outlet box(1).
6. Pull out the outlet wire and ground wire from the Outlet box(1).Make wire connections
   --Ribbed wire(w/o marking) from light to White wire(2) from power source.
   --Smooth wire(w/o marking) from light to Black wire(3) from power source.
   --Loop the Ground wire(4) to Mounting bar(6) with a Green screw(9)
7. Attach the Fixture canopy(19) against the Outlet box(1),secure with the Ball nut(10)
8. Install bulbs:(bulbs not include)
   (Please don't exceed the maximum capacity that recommended on the sockets).

INSTALLATION IS NOW COMPLETED

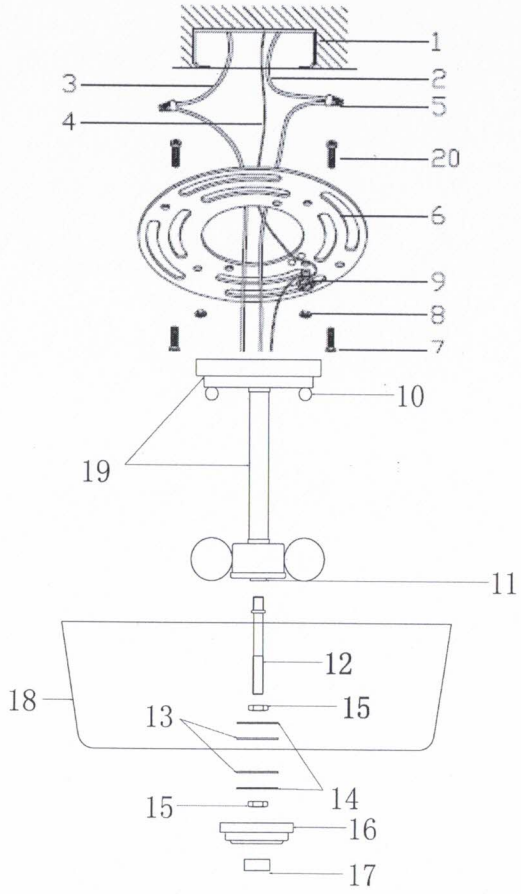

1. OUTLET BOX
2. WHITE WIRE
3. BLACK WIRE
4. GROUND WIRE
5. WIRE CONNECTOR
6. MOUNTING BAR
7. MOUNTING SCREW
8. HEX NUT
9. GROUND WIRE SCREW
10. BALL NUT
11. CONNECTOR
12. NIPPLE
13. RUBBER WASHER
14. FLAT WASHER
15. HEX NUT
16. CAP
17. FINIAL
18. GLASS
19. FIXTURE CANOPY
20. MOUNTING SCREW